HGS-03-FX-025A01

HGS KOREA

Fixed Lens Spec

Resolution		1MP
Focal Length		9mm
F No.		F6.0
Image Format		1/3"
Mount		M12
Field Angle (1/3")	D	34.4°
	H	27.9°
	V	2.1°
Total Track Length		Φ14×10mm
Optical Distortion		-4.0%
Mechanical Back Focus		MBF=5.27mm (in air)
Iris		Fixed
IR Correction		No
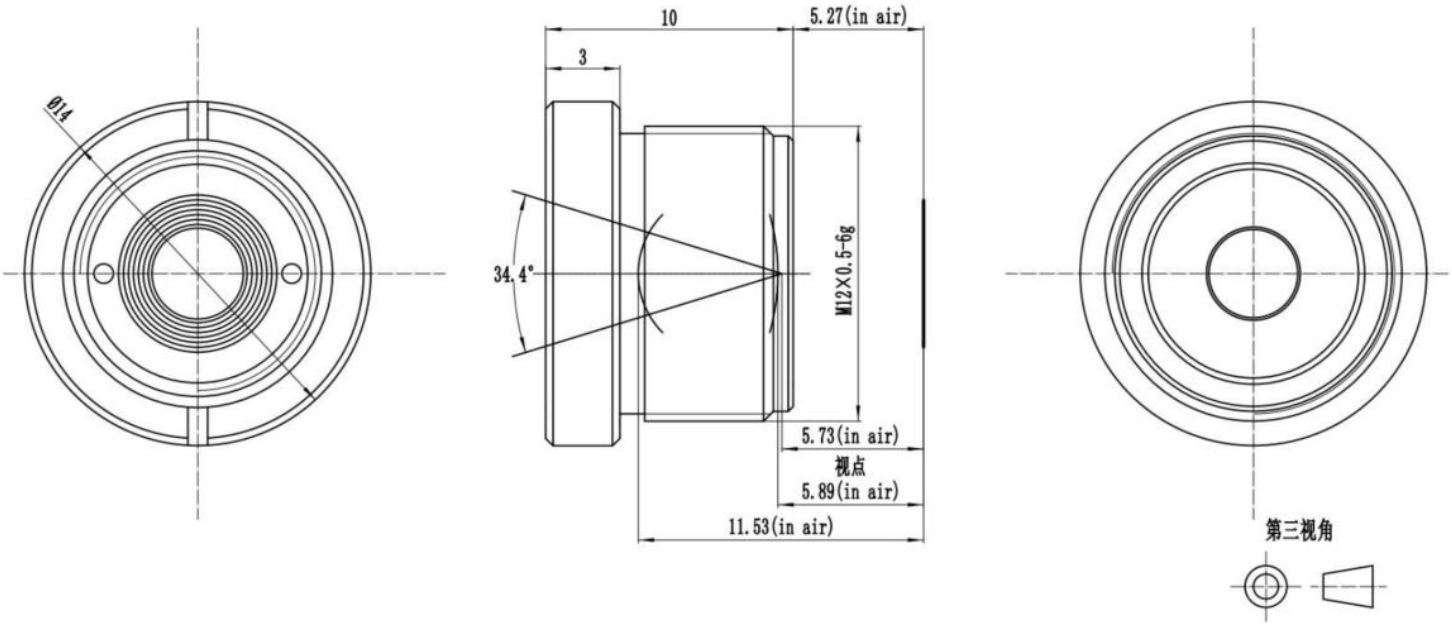
Mechanical Outside Drawing