HGS-03-ITS-011A01

HGS KOREA

ITS Lens Spec

Resolution		5MP
Focal Length		16mm
F No.		F1.4
Image Format		2/3"
Mount		C
Field Angle 2/3"	D	38.4°
	H	30.6°
	V	23.2°
Total Track Length		Φ40×60.35～61.65mm
Optical Distortion		-2.8%
M.O.D.		0.5m
Mechanical Back Focus		MBF=9.23mm(in air)
Iris		Manual
Focus		Manual
IR Correction		No
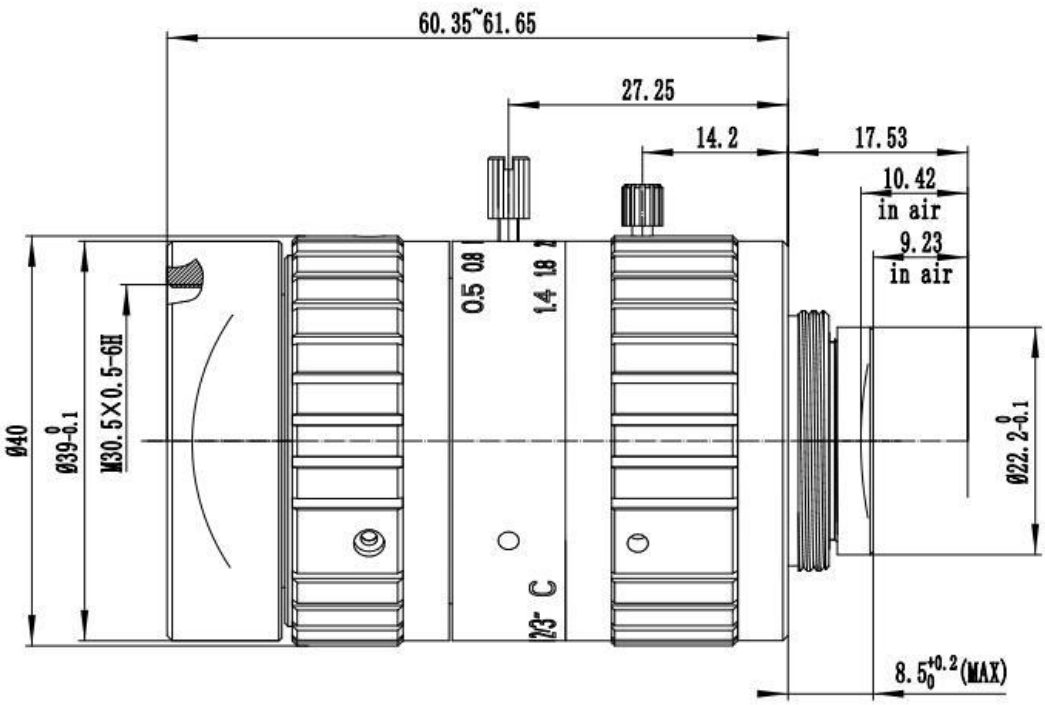
Mechanical Outside Drawing